CITY OF FREDERICKSBURG
HISTORIC REVIEW BOARD
TUESDAY, AUGUST 9, 2011
CITY HALL
CONFERENCE ROOM
126 W. MAIN ST.
5:30 P.M.

1. Call to Order

2. Approve Minutes of July 2011 Regular Meeting *Pp 1 - 5*

APPLICATIONS

3. Application #11-41 by Jim Garner at 607 W. Main St. to add faux storefront, repair wood, gutters, fence, and roof on property as needed, paint exterior, and add security barrier and fence to rear of property. *Pp 6 - 14*

4. Application #11-43 by Jerry Sample on behalf of Janis Joseph Maund at 121 W. San Antonio St. to: *Pp 15 - 27*

   A) Re-roof, repair rotten wood and paint exterior
   B) Replace windows with energy effiecient windows of same size and style
   C) Take in screened-in porch on southwest side to increase size of kitchen and allow laundry room to be moved from tank house
   D) Take in portions of both upper and lower rear porches to enlarge the existing downstairs bath and to allow room for a new bath upstairs
   E) Addition off both upper and lower porches with a slightly revised rear roofline to allow space for closets
   F) Move tank house to southeast, rear corner of lot.

SIGN OFF APPLICATIONS

5. #11-44 Replace pickets & replace metal edging with stone - 414 E. Main (Cauthen) *Pp 28 - 29*
6. #11-45 Replace door, remove step & board to sidewalk level - 149 E. Main (Roming) *Pp 30 - 33*
7. #11-46 Replace rotten wood flooring & facia - 425 W. Main (Crenwelge) *Pp 34 - 36*
8. #11-47 Paint exterior and remove gutters - 109 E. Schubert (Reichenau) *Pp 37 - 38*

ADJOURN

STATE OF TEXAS
COUNTY OF GILLESPIE
CITY OF FREDERICKSBURG

HISTORIC REVIEW BOARD
July 12, 2011
5:30 PM

On this 12th day of July 2011, the Historic Review Board convened in regular session at the regular meeting place thereof, with the following members present to constitute a quorum:

LARRY JACKSON
MIKE PENICK
CHARLES SCHMIDT
BURLEIGH ARNECKE
ERIC PARKER
RICHARD LAUGHLIN
STAN KLEIN
MARCIA DIETZ

ABSENT: SHARON JOSEPH
J. HARDIN PERRY

ALSO PRESENT: BRIAN JORDAN – Director of Development Services
PAT MCGOWAN - City Attorney
TAMMIE LOTH - Development Coordinator

The meeting was called to order at 5:30 PM by Larry Jackson.

MINUTES

Burleigh Arnecke moved to approve the minutes from the April 2011 regular meeting. Charles Schmidt seconded the motion. All voted in favor and the motion carried.

APPLICATIONS

Application #11-33 by Jason Rustin at 412 W. Austin to rebuild front porch and porch roof. Jason Rustin presented the application. Mr. Rustin noted he would like to replace the porch because the ceiling and floor are rotted out, but he will replace it so the detailing will be exactly the same as it is now. Mr. Rustin noted the roof is a pan roof, which catches the water and then drains it out, and he would like to replace it with a slight shed roof using the same roofing material that is currently on the house. Larry Jackson asked if he would lay a wood floor on the porch and Mr. Rustin noted he would. Mr. Rustin stated the gingerbread is still in good shape and the posts are in fair shape so he will re-use both of those materials. Mr. Rustin stated the handrail cannot be re-used, but he will install one to look exactly like the existing. Mike Penick asked if there was any slope on the existing porch or if he would have to bring the roof up. Mr. Rustin stated he would not have to

come up any on the slope because it measures nine feet against the house and drops to 8-7", and he will use the same 5" pitch. Stan Klein noted the building is a high rated building and the porch is very significant to the building. Mr. Klein also noted the roof has an incorporated drain system but if the roof is changed to a shed roof water will drain off the end and run back to the porch, which will then rot. Mr. Klein noted his concern in putting the slope back on is the profile of the structure from the side, because that will be changed. Mr. Klein stated in a prior application on another property the Board suggested the applicant put on a hip roof and that is something he should consider. Mr. Rustin asked if putting gutters on the porch are permissible and Mr. Klein noted it will change the profile of the building. Mr. Klein asked if the floor on the porch is still the original wood and Mr. Rustin stated it was not. Mr. Klein asked the applicant if he would re-install tongue and groove and Mr. Rustin noted he would. Larry Jackson asked the applicant if he had considered leaving the roof flat. Mr. Rustin stated he could leave it flat, but he still has to take the entire ceiling off the porch because it is rotted.

Stan Klein moved to approve Application #11-38 based on the recommendations presented by the Board with the following two options:

1) Restore the porch back to a flat roof, with the understanding the entire porch will be restored, and if the incorporated roof is installed, work out the details that will not be visible to the Board
2) If a slope roof is constructed, a hip should be installed so the roof will be a custom seam with a low slope, making the ridge come back to the corner.

Marcia Dietz seconded the motion. All voted in favor and the motion carried.

Application #11-38 by Paul Wolters at 102 S. Lincoln to construct a freestanding wood deck on the courtyard side of 102 S. Lincoln. Construction of the deck commenced prior to the applicant having the approval of the Historic Review Board. Mr. Wolters presented the application and stated he has disassembled the deck because the owner of the property decided she did not want any railing installed and Mr. Wolters felt that would be too much of a liability. Mr. Wolters stated he is withdrawing his application and may just put in a flat gravel area with landscaping.

Application #11-41 by Jim Garner at 607 W. Main St. to add faux storefront, repair wood, gutters, fence, and roof on property as needed, paint exterior, and add security barrier and fence to rear of property. Bill Vernon, a friend of the applicant, presented the application. Stan Klein stated the Board is always concerned with scale and noted it appears that one dimension doesn't extend to the top of the first parapet and Mr. Vernon noted there is a 6" difference in the house to the left of the subject property and the property in question. Mr. Klein asked if the new doors will be operable and Mr. Vernon stated they would be. Mr. Klein commented the drawing shows a simple profile but some simple details are not identified, such as the railing and spindles. Mr. Klein stated they are looking for a continuity of scale and commented he assumes the columns are 4 x 4. Richard Laughlin noted there is not an east elevation and he is a little concerned about what will be visible from that direction. Mr. Klein stated the Board needs additional information such as the materials

being used, a side view, and a dimensional comparison of the buildings on the property. Mike Penick noted the drawing presented shows the windows, the railing, and the doors all higher than what is existing, and they need to know if that is intended or if the drawing is just not to scale. Mr. Penick also commented they need to know the size of the posts. Mr. Klein stated the Board needs to see a drawing that is to scale.

Stan Klein moved to table application #11-41 until the following meeting to give the applicant time to present the information the Board has requested. Richard Laughlin seconded the motion. All voted in favor and the application was tabled.

Application #11-42 by Steve Thomas on behalf of Kathy Sanford at 605 W. Schubert to add 160 square foot bathroom to west side of residence. Steve Thomas presented the application and noted the owner has a 1914 residence and would like to add a bath to the side of the house because the only full bath is upstairs and her bedroom is downstairs. Mr. Thomas stated the building is brick and has cast concrete lentils and sills, and all the sills line up around the house. Mr. Thomas noted the back part of the house has a screen porch with tear drop wood siding and this is where he intends to put the addition. Mr. Thomas commented there is a false window shown on the north elevation and he believes he has talked the owner out of putting that in. Mr. Thomas stated the false window draws unnecessary attention to the addition and there is not another shutter anywhere on the house. Richard Laughlin asked what colors will be used on the addition and Mr. Thomas stated the owner favors using the same color that is on the house, which is a very light blue. Mr. Thomas noted it would be hard to find a contrast color but if one is used it will be white or off white.

Richard Laughlin moved to approve Application #11-42. Mike Penick added the requirement the false window be eliminated and suggested some of the detail in the gable be added to the new roof. Stan Klein noted the windows on the porch have been replaced and the roof has been modified from a flat roof to a slope, and suggested if the owner insists on putting in the false window, Mr. Thomas should hip the roof to create the same proportion of the existing openings.

Marcia Dietz seconded the motion to approve Application #11-42 with the requirement the false window be eliminated. All voted in favor and the motion carried.

Application #11-43 by Jerry Sample on behalf of Janis Joseph Maund at 121 W. San Antonio St. to:

A) Re-roof, repair rotten wood and paint exterior
B) Replace windows with energy efficient windows of same size and style
C) Take in screened-in porch on southwest side to increase size of kitchen and allow laundry room to be moved from tank house
D) Take in portions of both upper and lower rear porches to enlarge the existing downstairs bath and to allow room for a new bath upstairs
E) Addition off both upper and lower porches with a slightly revised rear roof line to allow space for closets
F) Move tank house to southeast, rear corner of lot.

Jerry Sample presented the application. Stan Klein asked what material he will use on the new roof and Mr. Sample stated it will be standing seam metal. Mr. Sample also noted they are leaning toward using the green color that is presently on the building. Mr. Klein noted the columns on the building are very unique and Mr. Sample agreed. Mr. Klein gave some history of the structure and noted his concerns are the visual changes that are made from the obscure corners, the porch roof, and the hips on the building. Mr. Sample noted the main changes to the building will be on the rear of the house at the southeast corner. Mr. Klein stated they do not have an elevation from the east side, but he believes an unusual form is going to be created when Mr. Sample tries to solve a problem of a closet for his client. Mr. Klein asked if the porch will be stepped back and Mr. Sample stated it would be. Mr. Klein commented it is good he is stepping it back, but he is still adding 8 feet, 2 stories high, and not all the information in the application is complete so the Board cannot completely understand until the details are clarified.

Mr. Klein then asked about the windows and noted the profile and proportions are very important and asked Mr. Sample to provide that information. Richard Laughlin asked if the windows will be a total replacement and Mr. Sample stated they will be and he will make sure the trim and windows on the exterior look exactly as they do now. Mr. Sample then noted there is not a mullion that matches what is there and there is not a window made today that is the exact width and height of the existing windows, so he will trim it from the interior to make certain the exterior match the historic windows. Mr. Klein asked Mr. Sample to provide information on the window profile in comparison to the existing windows.

Mr. Klein also asked for a drawing of the floor plan which illustrates the location and dimensions of the porch and asked Mr. Sample to prove to the Board the addition will not be visible.

Richard Laughlin asked Mr. Sample if he was going to use actual windows to close in the rear porch. Mr. Sample stated they are actual windows and added the gingerbread and posts will be applied over the top of the windows. Mike Penick asked if the windows will be operable and Mr. Sample noted they would be. Mr. Penick stated they are putting windows where there were none and suggested replacing the screen with fixed glass and leaving the gingerbread where it is. Mr. Sample then noted he is going to bring the wall of the porch up one foot. Mr. Klein asked if he will be doing anything with the skirting on the rear porch and Mr. Sample noted he wants to encapsulate it and bring it into part of the house. Eric Parker asked if he would do the same thing on the front and Mr. Sample noted he would do the same on the side porch, because that would tie in and solidify the porch as part of the house, but he will not do the same underneath the front porch area. Mr. Klein commented he should let the porch read as a porch and make it look transparent by using glass instead of screen.

The Board then moved onto the discussion of moving the tank house and Mr. Laughlin asked if the ordinance allows the tank house to be moved. Brian Jordan, Director of Development Services, stated in the past they have looked at tank houses as part of an element of the property, and they could not be demolished, but he believes the Board could consider moving it within the property.

Mr. Penick noted he does not mind allowing them to move the tank house, but he does not approve of where they are asking to move it and believes it should stay closer to the area where it is now. Mr. Sample stated they are trying to make it a focal part of the back garden area.

Mr. Sample then commented the owner would like to tear down the garage and re-build it but Mr. Sample noted he believes that loses the historical significance and he would like to raise it up and put a foundation underneath it.

Larry Jackson asked Mr. Sample to put two stakes in the ground in the location of the proposed corners of the addition for the Board to check the visibility. Mr. Jackson also asked Mr. Sample to present the following items the Board has requested throughout the discussion:

1) New drawings of the addition
2) Revisions to the windows for the screened-in porch
3) Drawing showing the tank house squared up on the property
4) Accurate elevations from the east side
5) Profile of windows

Mike Penick moved to table Application #11-43. Charles Schmidt seconded the motion. All voted in favor and the motion carried.

ADJOURN

With nothing further to come before the Board, Richard Laughlin moved to adjourn. Eric Parker seconded the motion. All voted in favor and the meeting was adjourned at 7:12 p.m.

PASSED AND APPROVED this the 9th day of August, 2011.

SHELLEY BRITTON, CITY SECRETARY

SHARON JOSEPH, CHAIRMAN

Historic Review Board
Application Information

Application Number:	11-41
Date:	August 3, 2011
Address:	607 W. Main
Owner:	Jim Garner
Applicant:	Jim Garner
Rating:	Low
Proposed Modifications:	See attached.
Neighborhood Characteristics:	The subject property is in the Historic District.
Staff Comments:	The scope of the project justifies Board review.

General Notes:

The mandatory functions of the Board include the following:

(1) Removal, addition or modification of architectural detail. The distinguishing historic qualities or character of a building, structure, or site and its environment shall not be destroyed. Removal or modification of any historic material or distinctive architectural features may be accomplished upon issue of certificate of appropriateness; however, this should be avoided when possible. Architectural features include but are not limited to exterior wall materials, windows, railings, decorative woodwork, masonry, or stone elements.
(2) Paint color and application. Traditionally, the base colors of Fredericksburg's buildings have been soft muted shades of greens, blues, whites, and tans. In order to continue the historic integrity of the buildings in the district, these colors continue to be acceptable today, and do not require review or issuance of a certificate. The building official shall determine whether or not the proposed color is within the approved list of colors. Base colors such as vibrant or "hot" shades, dark deep shades, and black shades are not acceptable. If one wishes to use these colors, a certificate of appropriateness must be granted in advance of paint application. The painting of existing historic buildings composed of materials such as unpainted stone or unpainted masonry is prohibited.
(3) New construction in historic districts. The board will review all new construction plans within Historic Districts in order to ensure visual compatibility with the surrounding buildings and environment in relation to height, gross volume, proportion, design harmony and setback.

The advisory functions of the Board include the following:

(1) The effect of the proposed change on the general historic, cultural, and architectural nature of the historic district or landmark.
(2) The appropriateness of exterior architectural features which can be seen from a public street, alley, or walkway.
(3) The general design, arrangement, texture, color, and material of the building, or structure, and the relation of such factors to similar features of buildings, or structures, in the district. This consideration shall not be the aesthetic appeal of the structure to the board nor the proposed remodeling, but rather its conformity to the general character of the particular historic area involved.
(4) Conformance of signage to the general historic, cultural, and architectural character of the historic district or landmark.
(5) The effects of the proposed change to the value of the historic district or landmark as an area of unique interest and character.
(6) The general and specific Standards for Rehabilitation and Guidelines for Rehabilitating Historic Buildings, as issued by the secretary of the interior.
(7) The importance of finding a way to meet the current needs of the property owner and the importance of approving plans that will be economically reasonable for the property owner to carry out.

Preservation Priority Rating. Three-tier rating system used in the 2002 *Fredericksburg Historic Resource Survey* to evaluate all properties within, and adjoining to, the City's Historic District. Ratings are based upon current determinations of architectural value and integrity and, if known, historical and cultural value, and may be altered from time to time as additional information is discovered or circumstances change.

HIGH rating. The most significant properties identified in the 2002 *Fredericksburg Historic Resource Survey*. These properties are considered to be outstanding, unique, or good examples of architecture, engineering, or design. Some are unique to the Fredericksburg area and are indicative of German-Texan vernacular forms and/or building techniques. Others are noteworthy examples of 19th and early 20th century architectural types, styles, and forms, erected using local building materials and construction technologies. Properties designated with a high rating are to be the most protected from alteration and demolition.

MEDIUM rating. Properties that may or may not be identified as architecturally significant on an individual basis, but are nonetheless valuable resources that add to the Historic District's overall character, and may be so ranked due to their or its proximity or contribution to the cultural, historic, architectural, or archeological character of the Historic District or surrounding properties. These properties may have been moderately altered or are typical examples of a common architectural style or form, but generally retain their historic integrity to a good or moderate degree. Properties designated with a medium rating shall be protected from demolition and where possible will be required or encouraged to maintain or improve architectural features.

LOW rating. Properties that minimally enhance the district's ability to convey a sense of time and place. These properties may be typical examples of more recent, common local building forms, architectural styles, or plan types; be examples of distinctive building forms, architectural styles, or plan types that have been significantly altered; lack the necessary age to meet the usual fifty (50) year threshold for possible National Register of Historic Places listing and do not appear to meet the National Register of Historic Places standard for exceptional significance for properties less than fifty (50) years of age, but which nevertheless may have relative value within the Historic District, meriting preservation. Properties or improvements with a low rating may be considered for relocation or demolition upon a determination by the Historic Review Board that the same can be accomplished with little or no consequence to the historical, cultural, architectural, or archeological character of the district or property.

11 - 41

Application for Certificate of Appropriateness

Application Date: JUNE 24TH, 2011 Application Complete: _____

Property Address: 607 WEST MAIN STREET

Legal Description: FBG ADD BLK 9, LOT 267

Owner: JIM GARNER Phone No. 830-456-1037

Address: 607 W. MAIN ST., FREDERICKSBURG, TX 78624

Applicant: JIM GARNER Phone No. 830-456-1037

Address: 607 W. MAIN ST., FREDERICKSBURG, TX 78624

Description of External Alteration/Repair or Demolition: ADD FAUX STOREFRONT TO EXISTING MASONARY BLOCK BUILDING, REPAIR WOOD, GUTTERS, FENCE, ROOF TO ALL ON PROPERTY AS NEEDED REPAINT TO MATCH. ADD SECURITY BARRIERS FENCE TO REAR FOR SECURITY PURPOSES.

Description of how the proposed change will be in character with the architectural or historic aspect of the structure or site: THE NEW FAUX FRONT OF MASONARY BLOCK BUILDING WILL CONFORM TO THE BUILDING ON EACH SIDE. COLOR TO BE OF THE HISTORICAL OF THAT PERIOD AS PER SAMPLES. REAR IMPROVEMENTS ARE FOR SECURITY DUE TO RECENT ACTIVITY.

Any circumstances or conditions concerning the property which may affect compliance with the ordinance: NONE THAT I AM AWARE.

RECEIVED JUN 27 2011

☒ Drawing ☐ Sketch Date Submitted: JUNE 27, 2011 ☐ Historic Photograph

Desired Starting Date: AUGUST 1, 2011 Desired Completion Date: DECEMBER 31, 2011

SURVEY RATING: ☐High ☐Medium ☐Low ☐None

☐ RTHL: Estimated Date of Construction _____

APPLICANT SIGNATURE: _____

The Applicant *certifies that he/she is the Owner or duly authorized Agent for the Owner of the Property*

_____ Date 7/5/11 ☐*Insignificant* ■*Significant*

Building Official's Determination *(Max 7 days)*

_____ Date 7/5/11 ☐*Insignificant* ■*Significant*

Chairman's Determination *(Max 7 days)*

Meeting Date (40 days max. after complete application) _____ Notice to Applicant: _____

APPLICATION FEE:-*$10.00 plus ☐ Board* CERTIFICATE OF APPROPRIATENESS-*$20.00*

8

Tammie Loth

From: "James Garner" <james_garner@ymail.com>
To: <tloth@fbgtx.org>
Sent: Wednesday, August 03, 2011 12:53 PM
Attach: FredericksburgMainStElevation.bmp
Subject: 607 West Main Street Revisions

Good Morning Tammy,

I am sending the updated drawing which has the same height railing on both buildings, same same trimmed windows, replacement of railroad timbers with concrete pad, No sign higher than roof peak and porportional doors. Front Elevation Drawing is close to scale as requested.

Other requested information is as follows:

1. The post that I have acquired from a building on Main Street that was change some 20 years ago are approximately 5" x 5" with turned areas. I would consider using plain square post if preferred by the board.

2. The siding to be used is original wood planks from building that is being dismantled in the Johnson City area since this is only a fasod and has no structural benefits to the main block structure. If this wood is considered not useable Hardie plank will be substitue with the same wood tecture profile.

3. Also there was a comment of the doors being uneven in height. The main reason that it appears this way is that the floor elevations on the two different buildings is not the same, therefore the doors are different in visual heights.

Thank you Tammy.

I will be finishing work in Washington, DC until mid August and appreciate your help in this matter. I also will contact Bill Vernon to see if he can attend the next meeting for me hoping that this gets approved in August. My contractor has now informed me that he has a large project starting soon and will have to delay his start on my project for foru or five months if can not get started soon. If you find more questions that are not answered when processing the minutes of the last meeting, please let me know and I will address them. Thanks again.

Best regards,

James

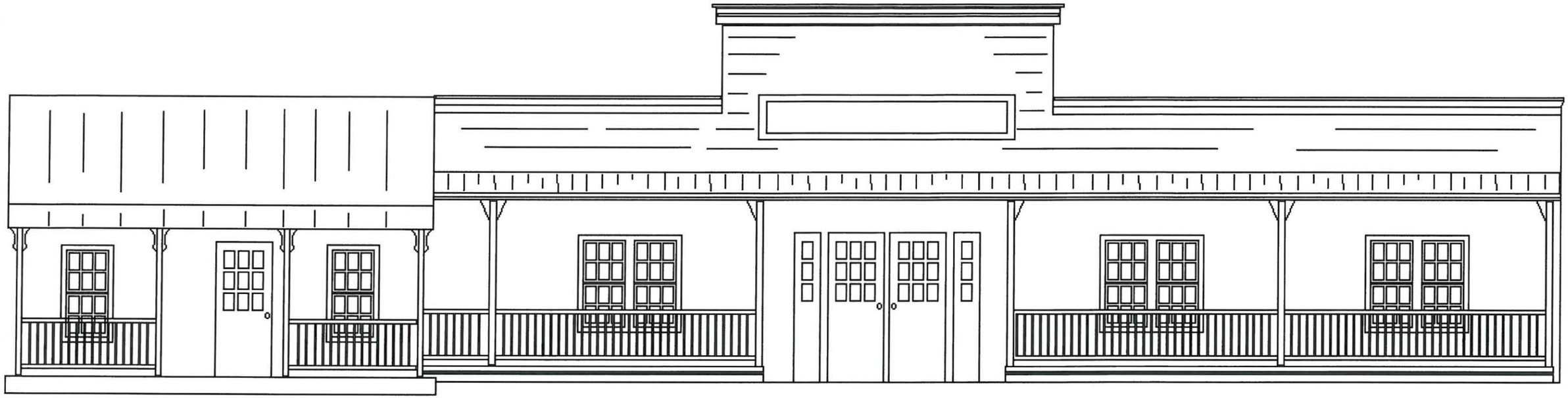

FRONT ELEVATION

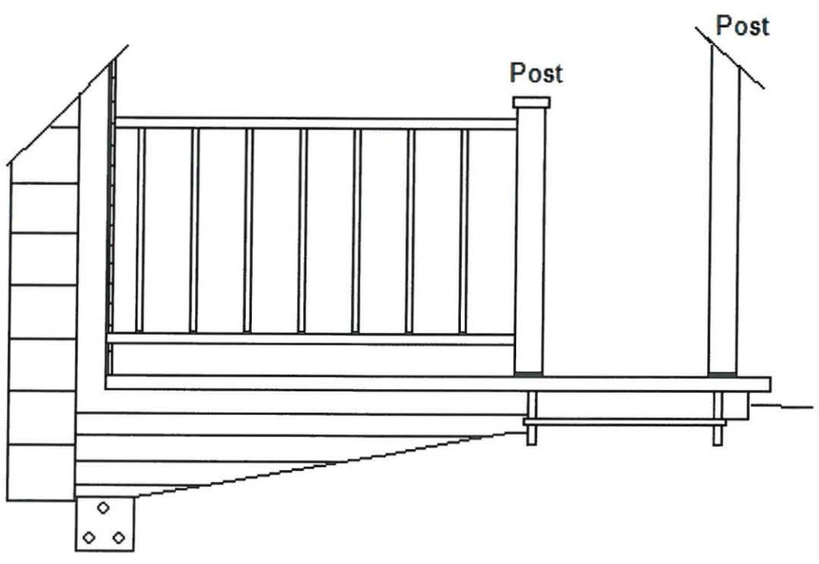

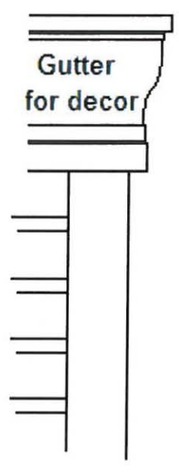

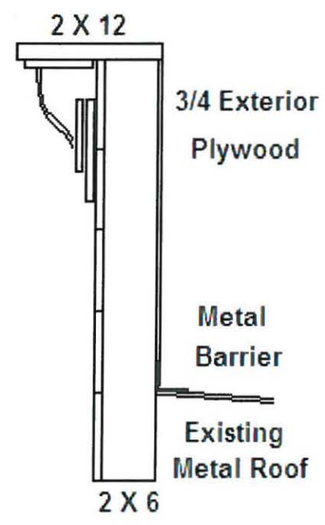

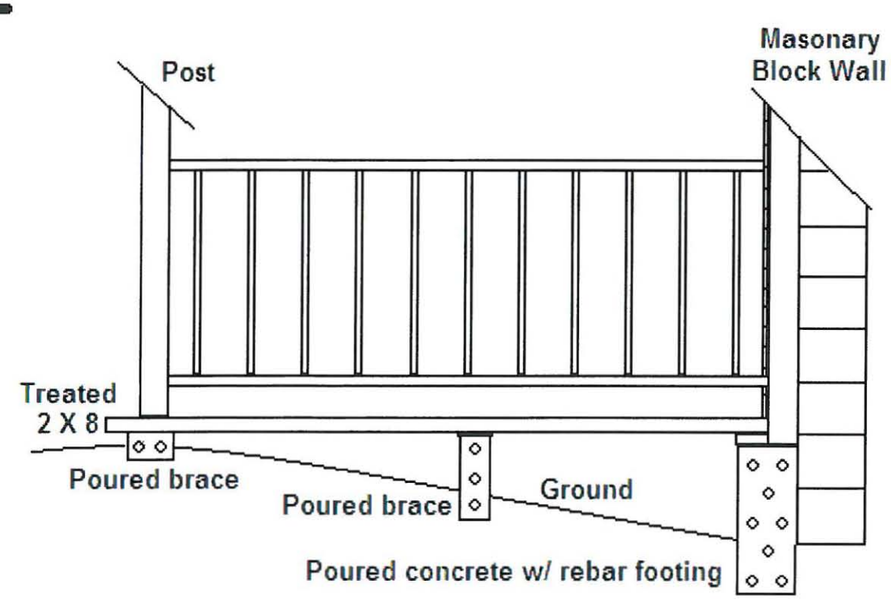

607 WEST MAIN STREET ELEVATIONS


7up
Clocks
07/07/2011


07/07/2011

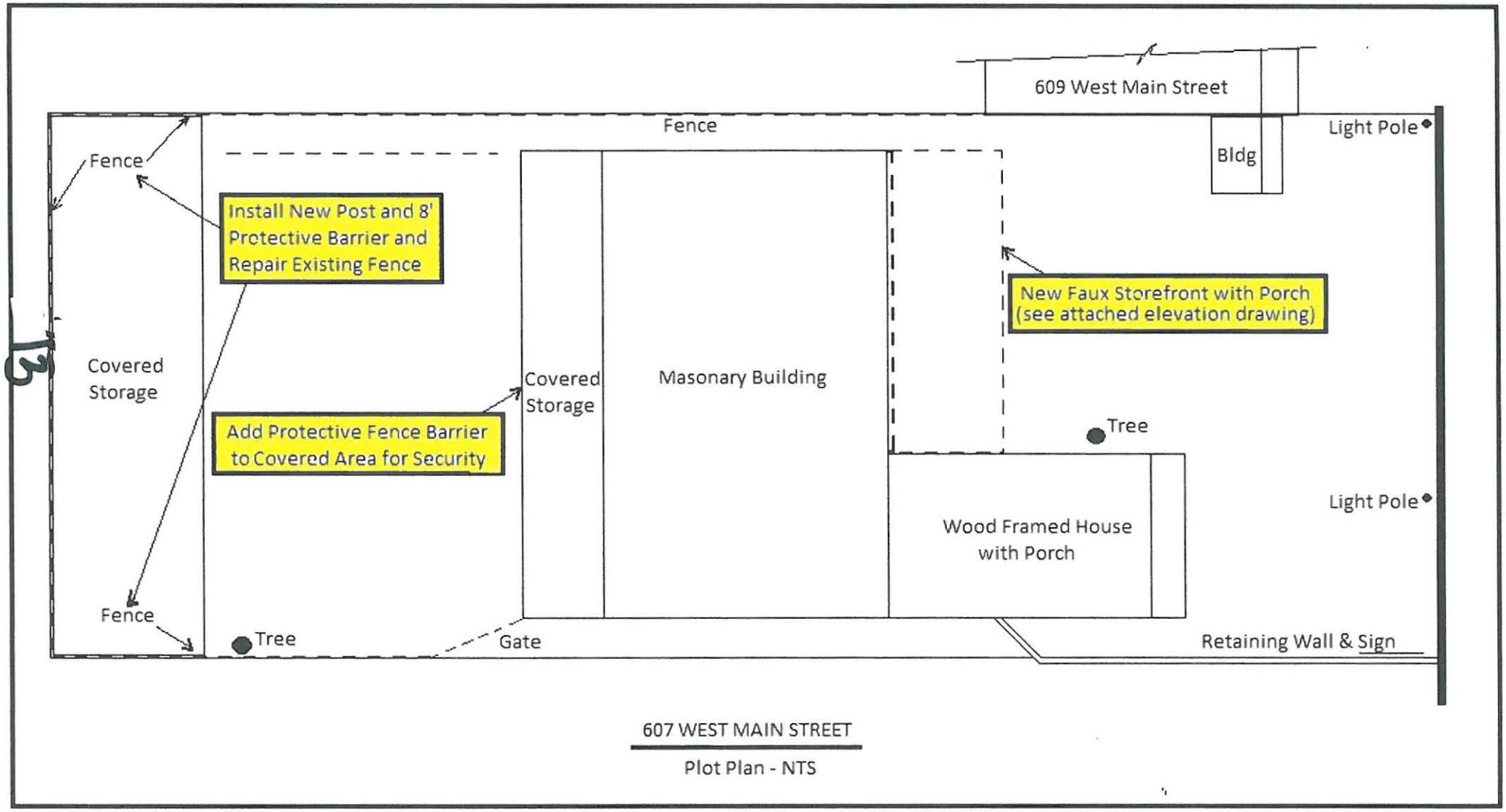

607 WEST MAIN STREET

Plot Plan - NTS

Colors for Wood Framed Small Building

Colors for New Faux Storefront -

Historic Review Board
Application Information

Application Number:	11-43
Date:	August 3, 2011
Address:	121 W. San Antonio
Owner:	Janis Joseph
Applicant:	Jerry Sample
Rating:	High
Proposed Modifications:	See attached
Neighborhood Characteristics:	The subject property is in the Historic District.
Staff Comments:	The scope of the project justifies Board review.

General Notes:

The mandatory functions of the Board include the following:

(1) Removal, addition or modification of architectural detail. The distinguishing historic qualities or character of a building, structure, or site and its environment shall not be destroyed. Removal or modification of any historic material or distinctive architectural features may be accomplished upon issue of certificate of appropriateness; however, this should be avoided when possible. Architectural features include but are not limited to exterior wall materials, windows, railings, decorative woodwork, masonry, or stone elements.
(2) Paint color and application. Traditionally, the base colors of Fredericksburg's buildings have been soft muted shades of greens, blues, whites, and tans. In order to continue the historic integrity of the buildings in the district, these colors continue to be acceptable today, and do not require review or issuance of a certificate. The building official shall determine whether or not the proposed color is within the approved list of colors. Base colors such as vibrant or "hot" shades, dark deep shades, and black shades are not acceptable. If one wishes to use these colors, a certificate of appropriateness must be granted in advance of paint application. The painting of existing historic buildings composed of materials such as unpainted stone or unpainted masonry is prohibited.
(3) New construction in historic districts. The board will review all new construction plans within Historic Districts in order to ensure visual compatibility with the surrounding buildings and environment in relation to height, gross volume, proportion, design harmony and setback.

The advisory functions of the Board include the following:

(1) The effect of the proposed change on the general historic, cultural, and architectural nature of the historic district or landmark.
(2) The appropriateness of exterior architectural features which can be seen from a public street, alley, or walkway.
(3) The general design, arrangement, texture, color, and material of the building, or structure, and the relation of such factors to similar features of buildings, or structures, in the district. This consideration shall not be the aesthetic appeal of the structure to the board nor the proposed remodeling, but rather its conformity to the general character of the particular historic area involved.
(4) Conformance of signage to the general historic, cultural, and architectural character of the historic district or landmark.
(5) The effects of the proposed change to the value of the historic district or landmark as an area of unique interest and character.
(6) The general and specific Standards for Rehabilitation and Guidelines for Rehabilitating Historic Buildings, as issued by the secretary of the interior.
(7) The importance of finding a way to meet the current needs of the property owner and the importance of approving plans that will be economically reasonable for the property owner to carry out.

Preservation Priority Rating. Three-tier rating system used in the 2002 *Fredericksburg Historic Resource Survey* to evaluate all properties within, and adjoining to, the City's Historic District. Ratings are based upon current determinations of architectural value and integrity and, if known, historical and cultural value, and may be altered from time to time as additional information is discovered or circumstances change.

HIGH rating. The most significant properties identified in the 2002 *Fredericksburg Historic Resource Survey*. These properties are considered to be outstanding, unique, or good examples of architecture, engineering, or design. Some are unique to the Fredericksburg area and are indicative of German-Texan vernacular forms and/or building techniques. Others are noteworthy examples of 19th and early 20th century architectural types, styles, and forms, erected using local building materials and construction technologies. Properties designated with a high rating are to be the most protected from alteration and demolition.

MEDIUM rating. Properties that may or may not be identified as architecturally significant on an individual basis, but are nonetheless valuable resources that add to the Historic District's overall character, and may be so ranked due to their or its proximity or contribution to the cultural, historic, architectural, or archeological character of the Historic District or surrounding properties. These properties may have been moderately altered or are typical examples of a common architectural style or form, but generally retain their historic integrity to a good or moderate degree. Properties designated with a medium rating shall be protected from demolition and where possible will be required or encouraged to maintain or improve architectural features.

LOW rating. Properties that minimally enhance the district's ability to convey a sense of time and place. These properties may be typical examples of more recent, common local building forms, architectural styles, or plan types; be examples of distinctive building forms, architectural styles, or plan types that have been significantly altered; lack the necessary age to meet the usual fifty (50) year threshold for possible National Register of Historic Places listing and do not appear to meet the National Register of Historic Places standard for exceptional significance for properties less than fifty (50) years of age, but which nevertheless may have relative value within the Historic District, meriting preservation. Properties or improvements with a low rating may be considered for relocation or demolition upon a determination by the Historic Review Board that the same can be accomplished with little or no consequence to the historical, cultural, architectural, or archeological character of the district or property.

11 - 43

Application for Certificate of Appropriateness

Application Date: 6-27-11 Application Complete: _____

Property Address: 121 West San Antonio Street, Fbg, TX 78624

Owner: Janis Joseph Maund Phone No. 512-426-8300

Address: P.O. Box 1608 Austin, TX 78767

Applicant: Jerry Sample Phone No. 830-889-1332

Address: 1219 Spotted Fawn Trail, Fbg, TX 78624

Description of External Alteration/Repair or Demolition:

Please see attached details –

Description of how the proposed change will be in character with the architectural or historic aspect of the structure or site:

Please see attached details –

Any circumstances or conditions concerning the property which may affect compliance with the ordinance: _____

☑ Drawing ☐ Sketch Date Submitted: _____ ☑ ~~Historic~~ Photograph

Desired Starting Date: 7-15-11 Desired Completion Date: 5-31-12

SURVEY RATING: ☑ High ☐ Medium ☐ Low ☐ None

☐ RTHL: Estimated Date of Construction 1895

APPLICANT SIGNATURE: Jerry Sample

The Applicant *certifies that he/she is the Owner or duly authorized Agent for the Owner of the Property*

_____ Date 7/1/11 ☐ *Insignificant* ■ *Significant*

Building Official's Determination *(Max 7 days)*

_____ Date 7/5/11 ☐ *Insignificant* ☒ *Significant*

Chairman's Determination *(Max 7 days)*

Meeting Date (40 days max. after complete application) _____ Notice to Applicant: _____

APPLICATION FEE:-*$10.00 plus ☐ Board Review*; CERTIFICATE OF APPROPRIATENESS-*$20.00*

RECEIVED JUL - 1 2011

Description of External Alteration / Repair or Demolition:

1. The house will be re-roofed and repainted with appropriate repairs for rotted wood, etc. made as the work is done.
2. Windows will be replaced with energy efficient, double pane, Low E windows throughout the home, same sizes and style as the original windows.
3. The screened-in porch on the southwest, rear corner of the house will be taken into the house to increase the size and functionality of the kitchen, and to allow room to bring the laundry area into the house from the tank house.
4. Portions of both upper and lower rear porches will be taken into the house to enlarge the existing downstairs bathroom, to allow room for a new bathroom upstairs (changes not visible from the street ~~– see Exhibit B~~).
5. A rear addition off both upper and lower porches will allow space for upper and lower closets, and the addition will be capped with a slightly revised rear roofline ~~(also see Exhibit B)~~.
6. The tank house will be moved from its current location to the southeast, rear corner of the lot.

Description of how the proposed change will be in character with the architectural or historic aspect of the structure or site:

1. A standing seam metal roof with a painted finish will be applied in place of the mixed material (part composition, part green metal) roof now on the house. The owners of the home are planning to retain the current look (paint color and placement) of the home with minimal changes.
2. JeldWen windows of the same size and style as the original windows will be used. They will be wooden windows with painted, metal clad exteriors and screens.
3. The newly enclosed rear porch will retain the look of the original structure by retaining the low wall, screened windows above it, screen door into the house from the west side, no changes to the existing roofline, etc. Even the original porch posts and gingerbread trim will be re-applied to the exterior of the addition, so from the San Antonio Street prospective the appearance of the house will be the same as now (possibly better with the gingerbread and posts exposed).
4. Only a portion of each rear porch will be taken into the house, still allowing for an upper screened in porch that will take advantage of southerly breezes, and a lower porch that will allow access into the kitchen from the private backyard area.
5. The small rear additions are not visible from the street, but add much needed closet space (which was a major deficiency in this vintage home) increasing the home's value and functionality for its next 100 years. The rear porch additions will unite the backyard and the rear of the house, taking advantage of the improved backyard layout and southerly breezes. Doors from the downstairs master bedroom and kitchen will give access to backyard space that will be ideal for grilling, entertaining and relaxing.
6. The tank house, in its current location, has functioned as the laundry room for many years. The original layout of the house did not accommodate laundry facilities, but the remote laundry is not desirable for modern use. The owner

wants the laundry moved inside the house, and current plans address that need. With that function addressed, and with the windmill that filled the tank removed sometime in the past, the need to have the tank house so near the back door is gone. Instead of tearing it down, we propose to move it further back in the yard where it can be used for storage / garden shed / etc. and its heavy visual impact will become a backdrop for the backyard. In this rear corner location, balanced by the existing two-car garage in the southwest corner of the backyard, the entire appearance and appeal of the property is improved.

The original structure was built to be a comfortable home with gracious public spaces for greeting and entertaining guests. The current plans will renew that tradition and allow the home to continue to function in the same manner for the next 100 years.

MAUND HOUSE
121 WEST SAN ANTONIO
FREDERICKSBURG, TEXAS 78624

FRONT VIEW FROM SAN ANTONIO STREET

MAUND HOUSE, 121 WEST SAN ANTONIO

VIEW FROM SAN ANTONIO STREET - WEST SIDE

VIEW FROM SAN ANTONIO STREET - EAST SIDE

MAUND HOUSE, 121 WEST SAN ANTONIO

VIEW FROM DRIVEWAY - WEST SIDE

VIEW FROM DRIVEWAY - WEST SIDE

MAUND HOUSE, 121 WEST SAN ANTONIO

VIEW OF GARAGE AT END OF DRIVEWAY

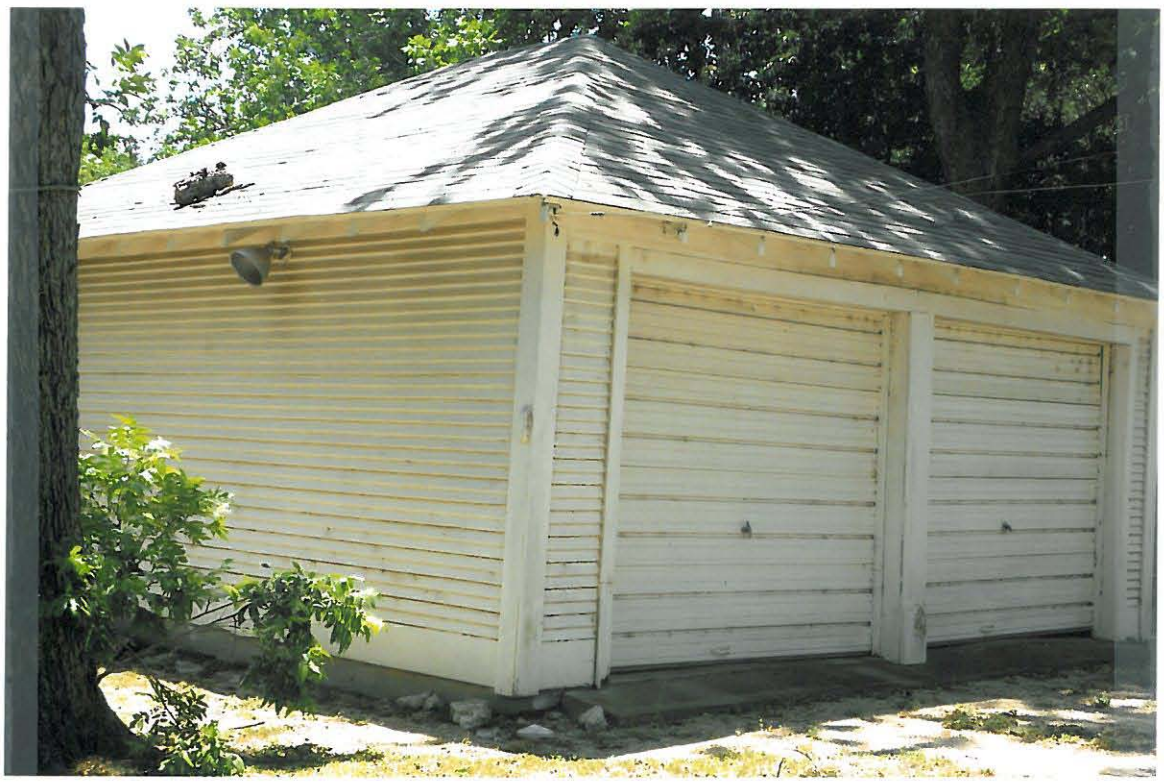

VIEW OF GARAGE AT END OF DRIVEWAY

MAUND HOUSE, 121 WEST SAN ANTONIO

VIEW OF HOUSE & TANK HOUSE FROM REAR

VIEW OF HOUSE FROM SE IN BACKYARD

MAUND HOUSE, 121 WEST SAN ANTONIO

VIEW OF EAST SIDE OF HOUSE – REAR PORTION

VIEW OF EAST SIDE OF HOUSE – FRONT PORTION

MAUND HOUSE, 121 WEST SAN ANTONIO

SCREENED PORCH REQUESTED TO BE FULLY ENCLOSED

VIEW OF BACKYARD EAST OF GARAGE

MAUND HOUSE, 121 WEST SAN ANTONIO

ACKWARD DOORS INTO
SCREENED PORCH

ACKWARD TRANSITION FROM
SCREENED PORCH TO TANK HOUSE &
FLAGSTONE WALKWAY

11 - 44

Application for Certificate of Appropriateness

Application Date: 7/11/11 Application Complete: _____

Property Address: 414 E. MAIN ST.

Owner: Jim & Brenda CAUTHEN Phone No. 432-559-1916

Address: P.O. Box 2696, MIDLAND, TX 79702

Applicant: JOHN AKIN Phone No. 830-456-5870

Address: 246 GALLE HOLT RD., FBG.

Description of External Alteration/Repair or Demolition: REPLACE Approx. 15 l.f. of Short picket fence with same style pickets. Remove River Rock and metal edging and replace with Stone curbing

Description of how the proposed change will be in character with the architectural or historic aspect of the structure or site: We Actually make it more in keeping by replacing metal edging with stone curbing.

Any circumstances or conditions concerning the property which may affect compliance with the ordinance: _____

NA

☑ Drawing ☐ Sketch Date Submitted: 7/11/11 ☐ Historic Photograph

Desired Starting Date: ASAP Desired Completion Date: _____

SURVEY RATING: ☑High ☐Medium ☐Low ☐None

☐ RTHL: Estimated Date of Construction _____

APPLICANT SIGNATURE: _____

The Applicant *certifies that he/she is the Owner or duly authorized Agent for the Owner of the Property*

_____ Date 7/18/11 ■*Insignificant* ☐*Significant*

Building Official's Determination *(Max 7 days)*

_____ Date _____ ☐*Insignificant* ☐*Significant*

Chairman's Determination *(Max 7 days)*

Meeting Date (40 days max. after complete application) _____ Notice to Applicant: _____

APPLICATION FEE:-*$10.00 plus ☐Board Review*; CERTIFICATE OF APPROPRIATENESS-*$20.00*

RECEIVED JUL 13 2011

28

Replacement of wood picket fence at this location only

Existing stone curbing

Existing wood picket fence

Existing metal edging

Existing driveway at Main Street

Close up of Stone Curb

Proposed Fence:

1. Remove existing metal edging
2. Install stone curb to match existing stone curb on opp. side of driveway.
3. Repair/rebuild and install existing wood picket fence.

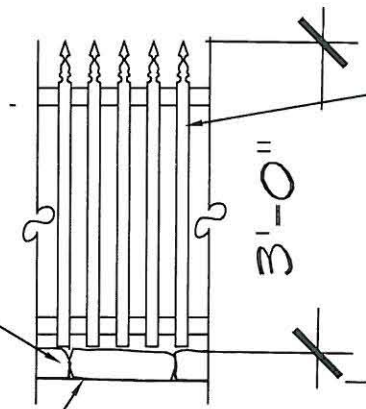

New stone curbing to match existing

Existing Driveway

Existing wood picket fence repaired & reinstalled

New stone curb

Existing Driveway

Elevation Proposed

Section

scale: 3/8" = 1'-0"

Fence Repair at
414 East Main Street
FREDERICKSBURG, TEXAS

07.06.11

STAN KLEIN, AIA, NCARB
TEXAS ARCHITECT
REGISTRATION NO. 9757

THIS DOCUMENT IS INCOMPLETE AND CAN NOT BE USED FOR REGULATORY APPROVAL, PERMITTING, OR CONSTRUCTION.

11-45

Application for Certificate of Appropriateness

Application Date: July 19 2011 Application Complete: _____

Property Address: 149 E. Main St

Legal Description: _____

Owner: Linda Langerhans Phone No. _____

Address: 147 E. Main St. Fredericksburg

Applicant: John Roming Phone No. 254-842-8456

Address: 123 E. Main St Fredericksburg

Description of External Alteration/Repair or Demolition: Put new door in place and remove non-attached Step and remove board at bottom of current door to Allow New door to reach to ~~Street~~ Sidewalk level.

Description of how the proposed change will be in character with the architectural or historic aspect of the structure or site: the present door is not presently in character of the building and new door will more closely match said architectural.

Any circumstances or conditions concerning the property which may affect compliance with the ordinance: _____

No

☒ Drawing ☒ Sketch Date Submitted: 7/19/11 ☒ Historic Photograph

Desired Starting Date: July 22, 2011 Desired Completion Date: July 29, 2011

SURVEY RATING: ☐High ☐Medium ☐Low ☐None

☐ RTHL: Estimated Date of Construction _____

APPLICANT SIGNATURE: _____

The Applicant *certifies that he/she is the Owner or duly authorized Agent for the Owner of the Property*

_____ Date 7/25/11 ☒*Insignificant* ☐*Significant*

Building Official's Determination *(Max 7 days)*

_____ Date 7/25/11 ☒*Insignificant* ☐*Significant*

Chairman's Determination *(Max 7 days)*

Meeting Date (40 days max. after complete application) _____ Notice to Applicant: _____

APPLICATION FEE:-*$10.00 plus ☐Board Review*; CERTIFICATE OF APPROPRIATENESS-*$20.00*

3-1

149 E. Main St. Not to scale

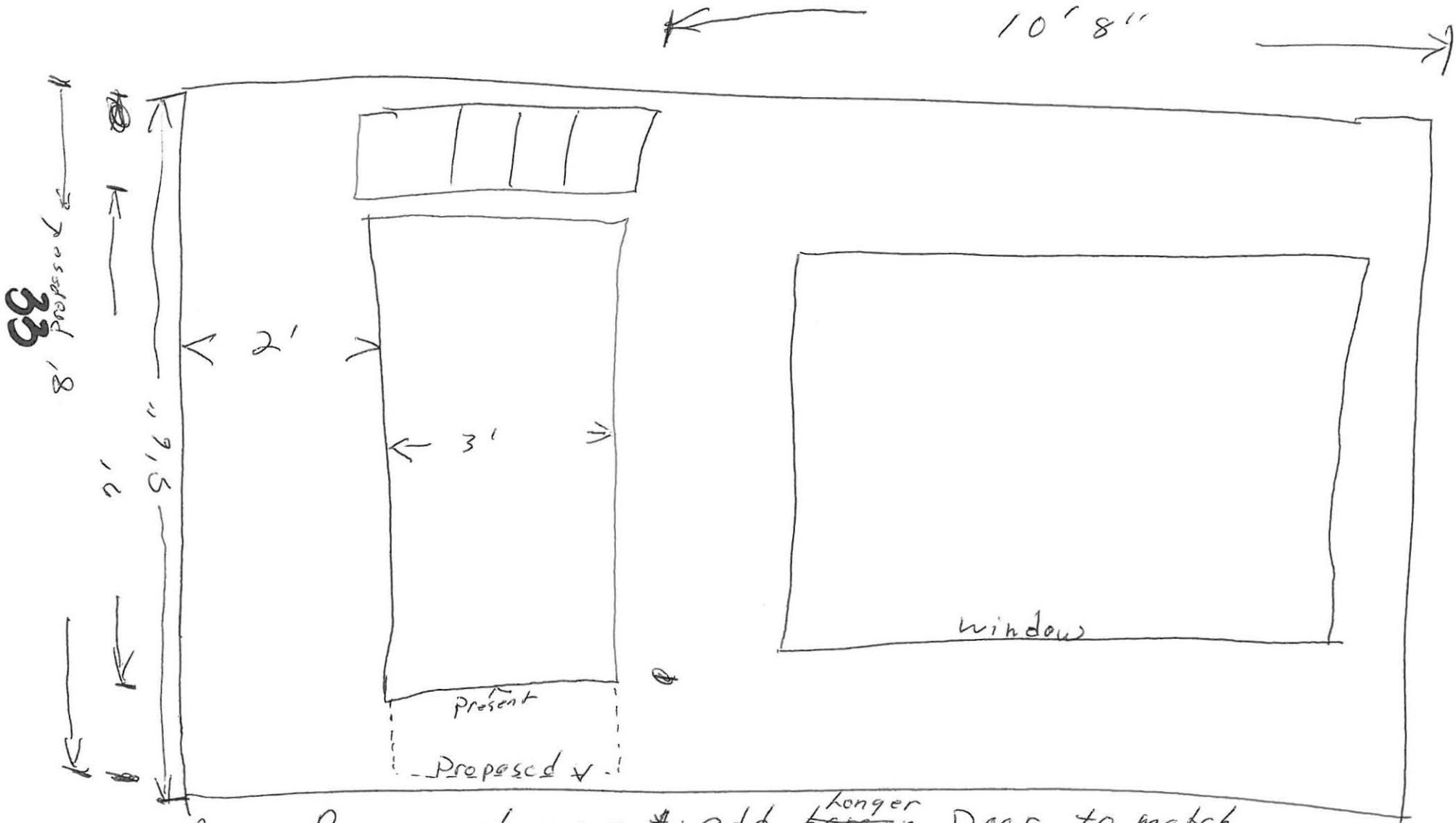

Propose Remove step up & add ~~larger~~ longer Door to match other half of building or as ~~clo~~ close as we can find.

11 - 46

Application for Certificate of Appropriateness

Application Date: 7-29-11 Application Complete: _____

Property Address: 425 W. Main St.

Owner: Tim Crenwelge Phone No. 830 739 2200

Address: 425 W. Main St.

Applicant: Brad Howard Phone No. 830 992 0293

Address: _____ Fax No. _____

Description of External Alteration/Repair or Demolition: Replacing rotten wood Flooring / Facia

Description of how the proposed change will be in character with the architectural or historic aspect of the structure or site: _____

Any circumstances or conditions concerning the property which may affect compliance with the ordinance: _____

☐ Drawing ☐ Sketch Date Submitted: _____ ☐ Historic Photograph

Desired Starting Date: _____ Desired Completion Date: _____

SURVEY RATING: ☐High ☐Medium ☐Low ☐None

☐RTHL: Estimated Date of Construction _____

APPLICANT SIGNATURE: _____

The Applicant *certifies that he/she is the Owner or duly authorized Agent for the Owner of the Property*

_____ Date 8/1/11 ☒*Insignificant* ☐*Significant*

Building Official's Determination *(Max 7 days)*

_____ Date 8/1/11 ☒*Insignificant* ☐*Significant*

Chairman's Determination *(Max 7 days)*

Meeting Date (40 days max. after complete application) _____ Notice to Applicant: _____

APPLICATION FEE:-*$10.00 plus ☐Board Review*; CERTIFICATE OF APPROPRIATENESS-*$20.00*

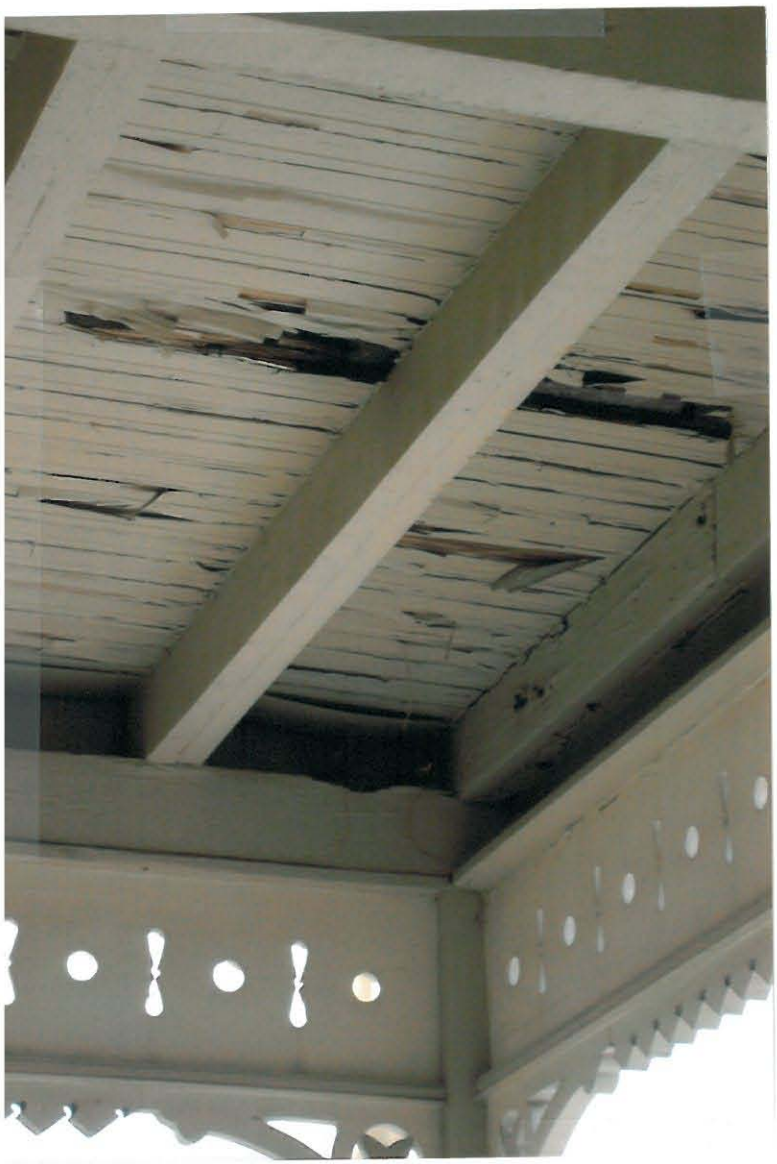

11 - 47

Application for Certificate of Appropriateness

Application Date: 7/29/11 Application Complete: _____

Property Address: 109 E Schubert

Owner: Jimmy Reichenau Phone No. 830-997-7891

Address: 1 E Ledge Stone

Applicant: Amber Zenner Phone No. _____

Address: _____ Fax No. _____

Description of External Alteration/Repair or Demolition: Repaint exterior of house and remove gutters

Description of how the proposed change will be in character with the architectural or historic aspect of the structure or site: _____

Any circumstances or conditions concerning the property which may affect compliance with the ordinance: _____

☐ Drawing ☐ Sketch Date Submitted: _____ ☐ Historic Photograph

Desired Starting Date: _____ Desired Completion Date: _____

SURVEY RATING: ☐High ☒Medium ☐Low ☐None

☐ RTHL: Estimated Date of Construction _____

APPLICANT SIGNATURE: Amber Zenner

The Applicant *certifies that he/she* is *the Owner or duly authorized Agent for the Owner of the Property*

_____ Date 7/29/11 ☒*Insignificant* ☐*Significant*

Building Official's Determination *(Max 7 days)*

_____ Date 8/1/11 ☒*Insignificant* ☐*Significant*

Chairman's Determination *(Max 7 days)*

Meeting Date (40 days max. after complete application) _____ Notice to Applicant: _____

APPLICATION FEE:-*$10.00 plus ☐Board Review*; CERTIFICATE OF APPROPRIATENESS-*$20.00*

W-D-710

Trim

W-D-710 ®
Creamy White

H

sussex green

HC-109

BENJAMIN MOORE®
COLOR PREVIEW®

HC

nantucket gray

38